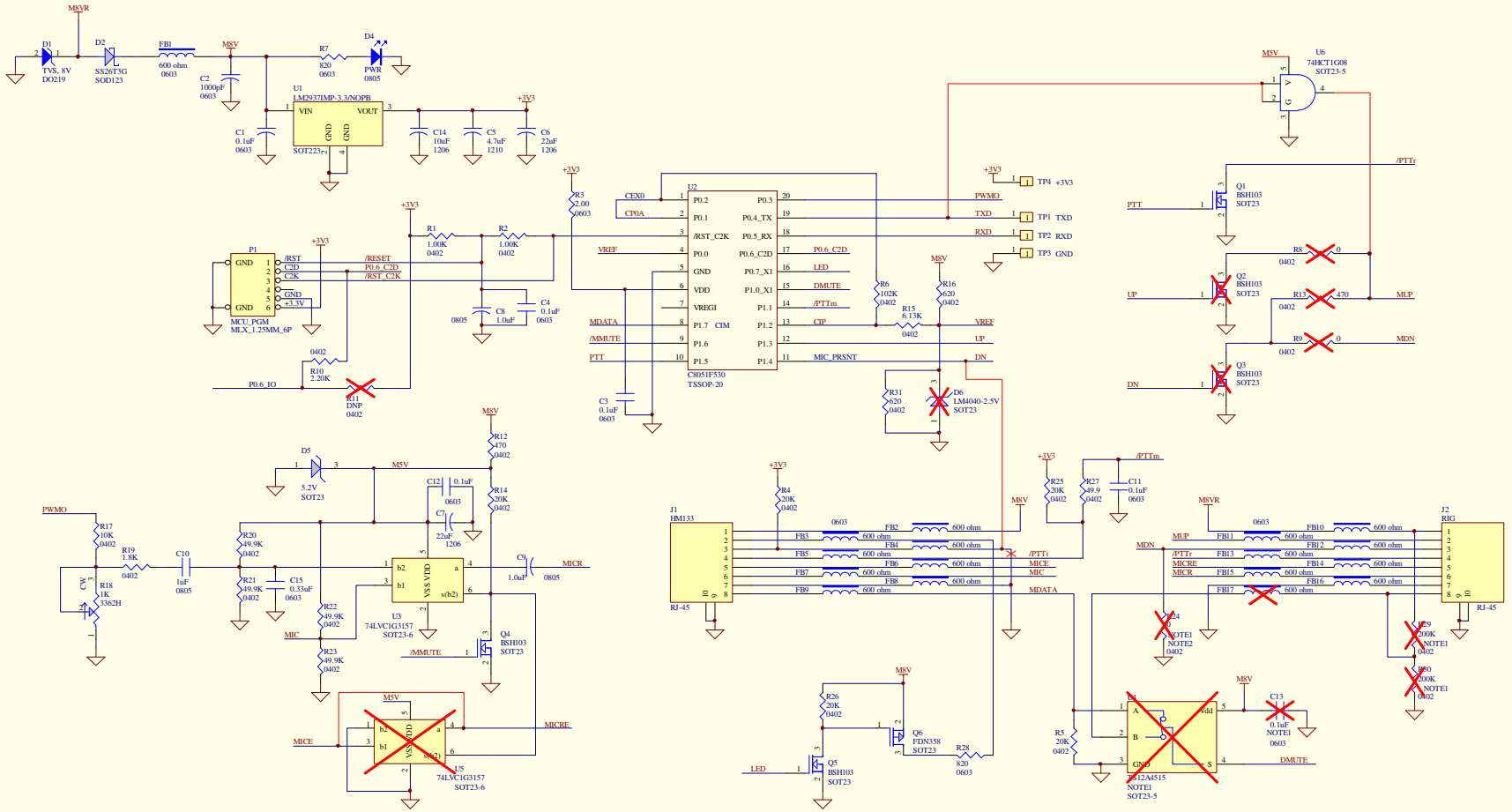

Title	HM133 DTMF Adapter, Wired-Remote	
Size C	Number HM133_DTMF_sch	Revision A
Date: 18-Jul-2022	Sheet of	
File: C:\Users\User\Documents\1f.sys\Radio dev\HM-133\new\Schematic_001\HM133_DTMF.ddb		