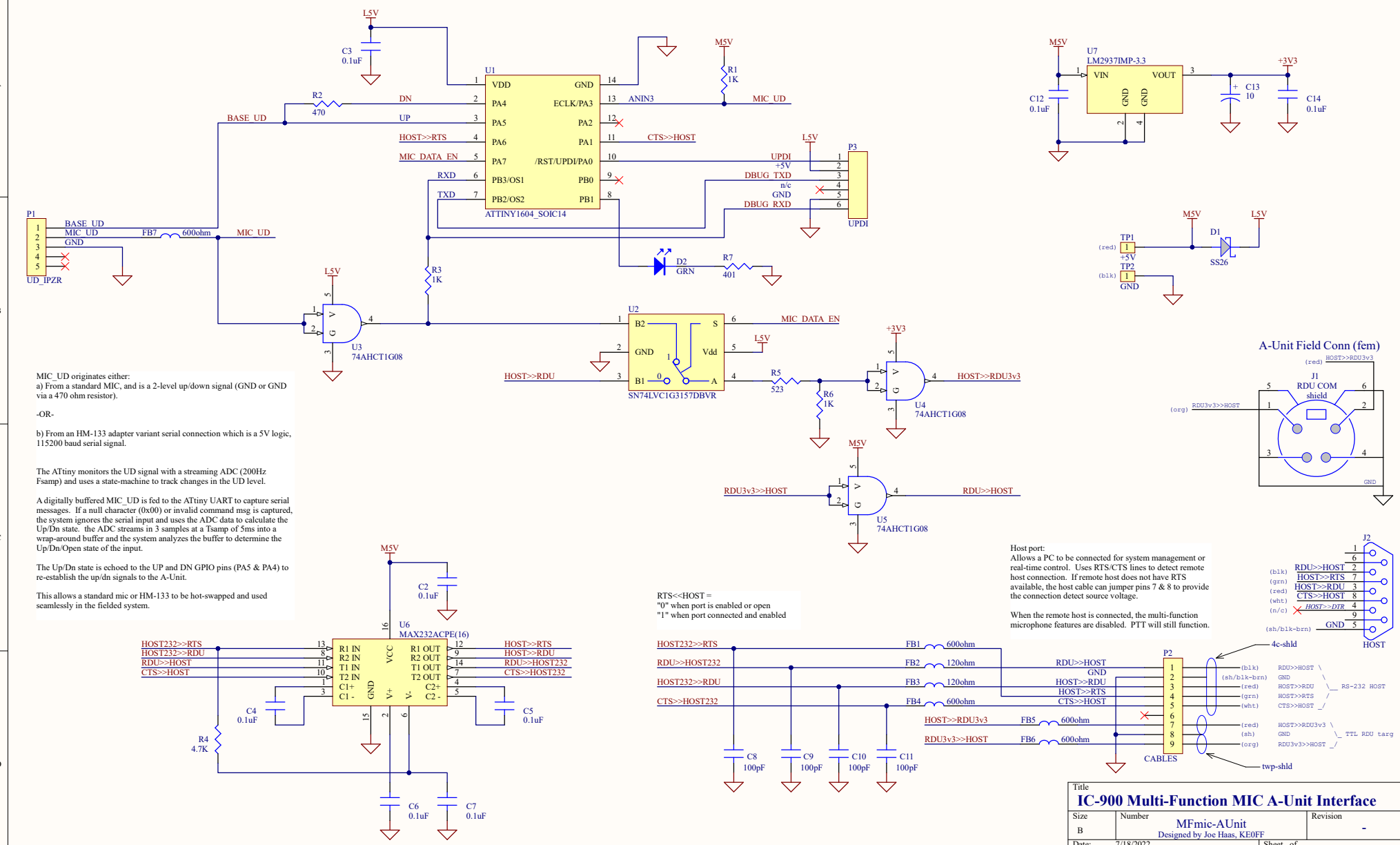
L5V
C3
0.1uF
U1
VDD
PA4
PA5
PA6
PA7
PB3/OS1
PB2/OS2
GND
ECLK/PA3
PA2
PA1
/RST/UPDI/PA0
PB0
PB1
ATTINY1604_SOIC14
R2
470
DN
UP
BASE_UD
HOST>>RTS
MIC_DATA_EN
RXD
TXD
ANIN3
CTS>>HOST
UPDI
+5V
DBUG_TXD
n/c
GND
DBUG_RXD
M5V
R1
1K
MIC_UD
P3
UPDI
P1
BASE_UD
MIC_UD
GND
FB7
600ohm
UD_IPZR
D2
GRN
R7
401
R3
1K
U3
74AHCT1G08
U2
B2
GND
B1
S
Vdd
A
SN74LVC1G3157DBVR
MIC_DATA_EN
HOST>>RDU
R5
523
R6
1K
+3V3
U4
74AHCT1G08
HOST>>RDU3v3
RDU3v3>>HOST
U5
74AHCT1G08
RDU>>HOST
U7
LM2937IMP-3.3
VIN
VOUT
C12
0.1uF
C13
10
C14
0.1uF
TP1
TP2
D1
SS26
A-Unit Field Conn (fem)
J1
RDU COM
shield
HOST>>RDU3v3
RDU3v3>>HOST
GND
MIC_UD originates either:
a) From a standard MIC, and is a 2-level up/down signal (GND or GND via a 470 ohm resistor).
-OR-
b) From an HM-133 adapter variant serial connection which is a 5V logic, 115200 baud serial signal.
The ATtiny monitors the UD signal with a streaming ADC (200Hz Fsamp) and uses a state-machine to track changes in the UD level.
A digitally buffered MIC_UD is fed to the ATtiny UART to capture serial messages. If a null character (0x00) or invalid command msg is captured, the system ignores the serial input and uses the ADC data to calculate the Up/Dn state. the ADC streams in 3 samples at a Tsamp of 5ms into a wrap-around buffer and the system analyzes the buffer to determine the Up/Dn/Open state of the input.
The Up/Dn state is echoed to the UP and DN GPIO pins (PA5 & PA4) to re-establish the up/dn signals to the A-Unit.
This allows a standard mic or HM-133 to be hot-swapped and used seamlessly in the fielded system.
U6
MAX232ACPE(16)
R1 IN
R2 IN
T1 IN
T2 IN
C1+
C1 -
VCC
GND
V+
V-
R1 OUT
R2 OUT
T1 OUT
T2 OUT
C2+
C2 -
HOST232>>RTS
HOST232>>RDU
RDU>>HOST
CTS>>HOST
HOST>>RTS
HOST>>RDU
RDU>>HOST232
CTS>>HOST232
C2
0.1uF
C4
0.1uF
C5
0.1uF
R4
4.7K
C6
0.1uF
C7
0.1uF
RTS<<HOST =
"0" when port is enabled or open
"1" when port connected and enabled
FB1
FB2
FB3
FB4
FB5
FB6
600ohm
120ohm
C8
100pF
C9
100pF
C10
100pF
C11
100pF
Host port:
Allows a PC to be connected for system management or real-time control. Uses RTS/CTS lines to detect remote host connection. If remote host does not have RTS available, the host cable can jumper pins 7 & 8 to provide the connection detect source voltage.
When the remote host is connected, the multi-function microphone features are disabled. PTT will still function.
J2
HOST
RDU>>HOST
HOST>>RTS
HOST>>RDU
CTS>>HOST
HOST>>DTR
GND
P2
CABLES
4c-shld
twp-shld
(blk) RDU>>HOST
(sh/blk-brn) GND
(red) HOST>>RDU
(grn) HOST>>RTS
(wht) CTS>>HOST
RS-232 HOST
(red) HOST>>RDU3v3
(sh) GND
(org) RDU3v3>>HOST
TTL RDU targ
Title
IC-900 Multi-Function MIC A-Unit Interface
Size
B
Number
MFmic-AUnit
Designed by Joe Haas, KE0FF
Revision
-
Date: 7/18/2022
Sheet of
File: E:\MF_mic_hw\mfmic.SchDoc
Drawn By: KE0FF